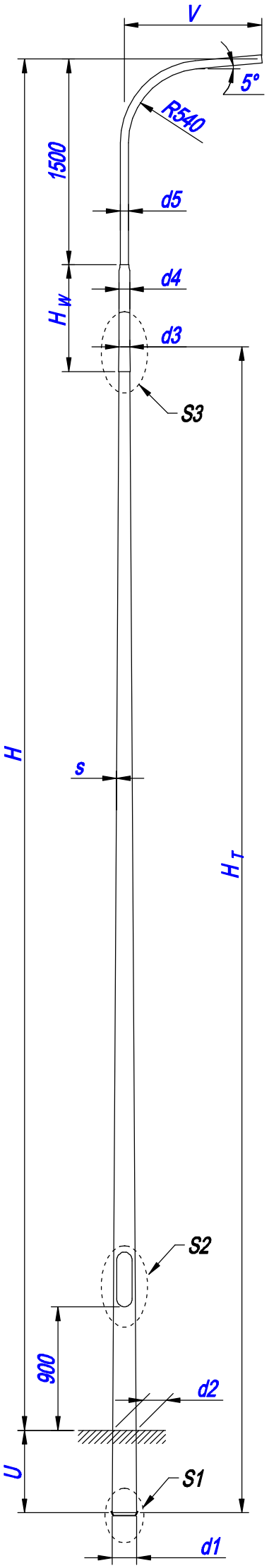

Type Tyyppi	H [m]	U [mm]	H_T [mm]	H_W [mm]	V [mm]	d1 [mm]	d2 [mm]	d3 [mm]	d4 [mm]	d5 [mm]	d6 [mm]
S-80CG-1r-1m	8	600	6500	780	1000	155	148	77	76	60	168
S-100CG-1r-1m	10	600	8500	780	1000	179	172	77	76	60	195
S-120CG-1r-1m	12	800	9700	1780	1000	194	184	77	76	60	208

Detail S3

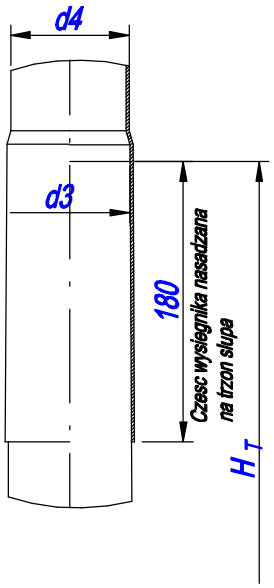

Detail S1

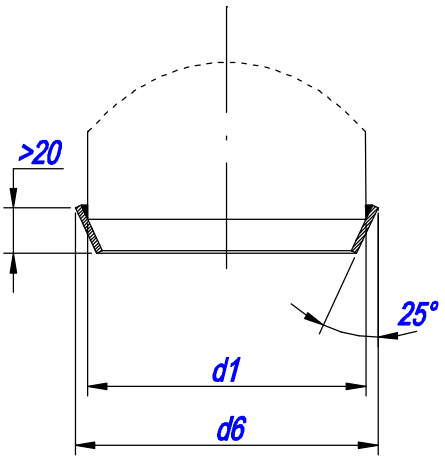

Detail S2

Base compartment
Aukko

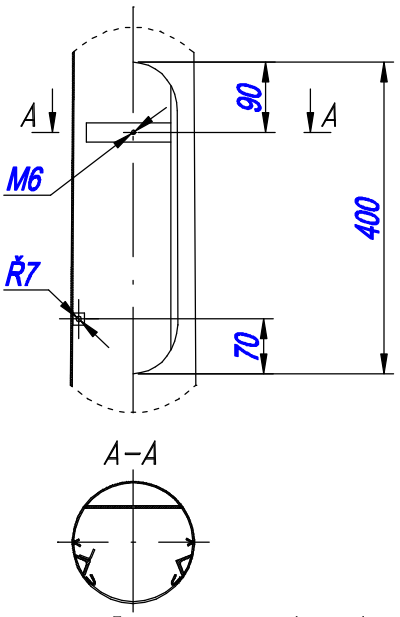

Door
Kansi

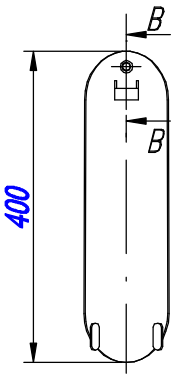

B-B

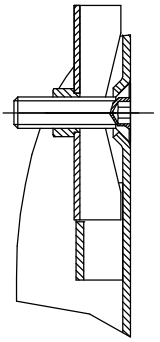

Base compartment additionaly supported.
Tyvessä erityisvahvistus

TRILIGHT
www.trilight.fi YKSIVARTISET KARTIOPYVÄÄT "NORDIC"
Piirustus n:o 2004-001, Päiväys: 07.07.2004

Elektromontaż Rzeszów SA
35-060 Rzeszów, ul. Slowackiego 20, tel. +48 17 864-05-30
http:\\ www.elmont-rzw.com.pl fax +48 17 853-67-60