Type Tyyppi	H [m]	U [mm]	V [mm]	d1 [mm]	d2 [mm]	d3 [mm]	d4 [mm]	d5 [mm]	d6 [mm]	L1 [m]	L2 [m]	L3 [m]	L4 [m]	L_W [mm]
S-80SRwG-2r-1m	8	600	1000	140	–	113	90	76	60	2.0	–	2.0	1.6	1500
S-100SRwG-2r-1m	10	600	1000	172	140	113	90	76	60	2.0	2.0	1.9	1.7	1500
S-120SRwG-2r-1m	12	800	1000	172	140	113	90	76	60	2.2	3.0	2.4	2.2	1500

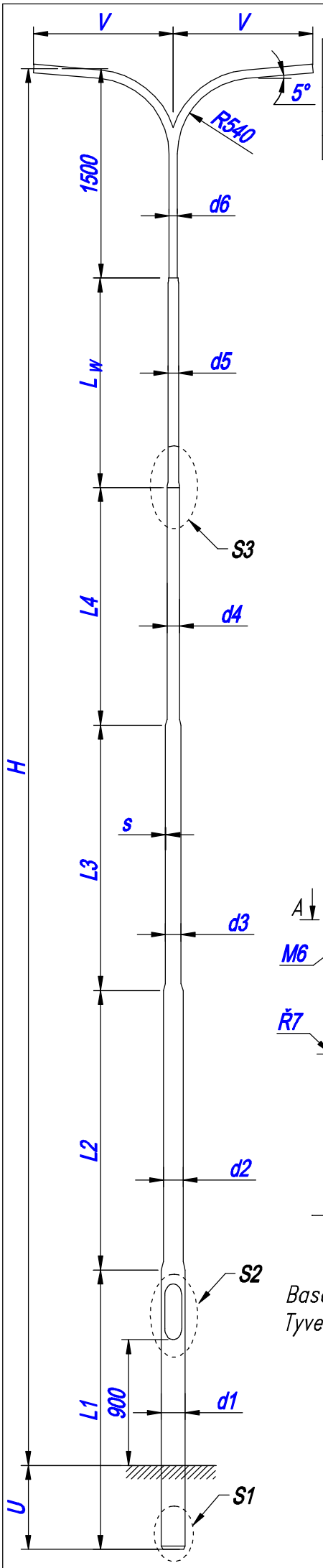

Detail S3

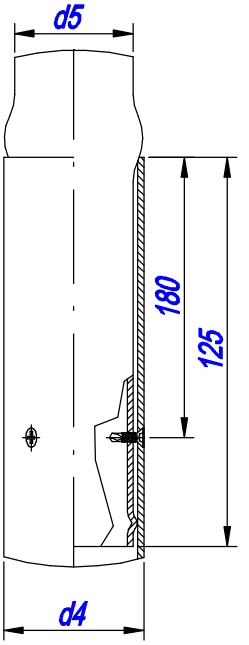

Detail S1

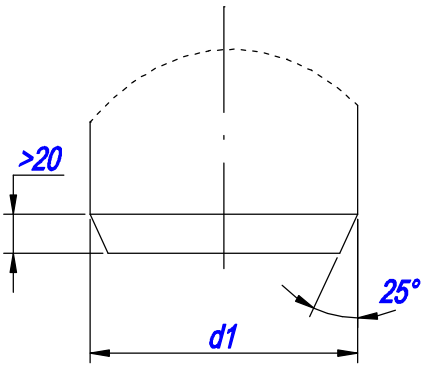

Detail S2

Base compartment
Aukko

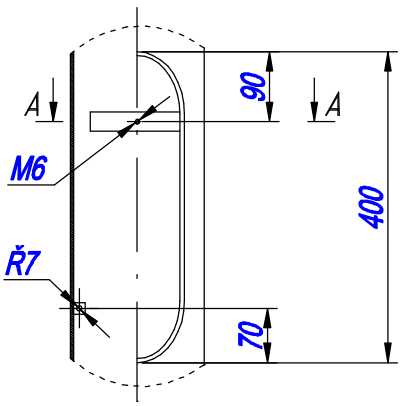

A–A

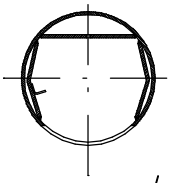

Door
Luukku

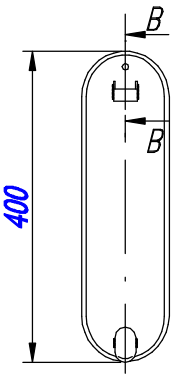

B–B

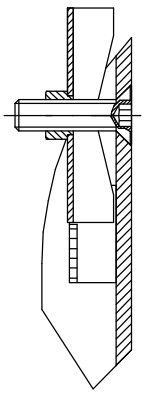

Base compartment additionaly supported
Tyvessä erityisvahvistus

TRILIGHT

www.trilight.fi KAKSIVARTISET OLAKEPYVÄÄT "NORDIC"

Piirustus n:o 2004-004, Päiväys: 07.07.2004

Elektromontaż Rzeszów SA

35-060 Rzeszów, ul. Slowackiego 20, tel. +48 17 864-05-30
http:\\ www.elmont-rzw.com.pl fax +48 17 853-67-60